YASKAWA

Creating **Workforce-Driven Models** and **Partnerships** between **Education** and **Industry**

Academic Representative:

Technology Education Concepts

1-800-338-2238 | www.TECedu.com | info@TECedu.com

INDUSTRIAL | MEDICAL | SERVICE | MILITARY | SPACE | HOUSEHOLD | ENTERTAINMENT | AND MORE!

Investing in a Brighter Future

YR-132 FEBRUARY 2017

YASKAWA

STEM ROBOTICS

STEM Platform

Material Handling

SCIENCE | TECHNOLOGY | ENGINEERING | MATHEMATICS

KEY BENEFITS

Teach robotics with the same equipment used in factories

Complete, modular packages with options for building custom platforms to fit curriculum and room layout

FACILITY REQUIREMENTS

Electrical: 220/240 or 110/120 single phase, 1 kVA

Air: maximum consumption 2 CFM @ 60-90 psi

YMEC

Components provided by Yaskawa Motoman Education Consortium

COGNEX

SCHUNK

SCHMALZ

QC Industries

- Pre-engineered solution designed for education and training programs in advanced manufacturing and robotics.
- Ideal for classrooms, labs and training centers.
- Platform can be used by schools participating in the MERIT certification program.
- Lightweight and fully integrated with a suite of industrial grade academic tools that meet the requirements of secondary educational programs.

COMPONENT	DESCRIPTION
Industrial-designed extruded aluminum cart	• Standard 34" width provides easy access through standard 36" doorway • 6 mm (1/4") thick composite work top is suitable for mounting class-specific peripheral equipment • Clear poly-carbonate side panels • Door safety interlock • Controller shelf and storage shelf • Integral, low noise air compressor • Industrial grade casters with integral brakes
MH5F or MHJF robot	Play speed is limited to 25% for safety.
FS100 robot controller	Configured for 220/240 VAC single-phase power with 110/220 VAC step-up transformer.
Gripper package	Pneumatic and vacuum grippers, control interface.
MotoSim® EG-VRC for Education	Comprehensive software package that provides accurate 3D simulation of robot cells and simulates a fully functional production environment.
Learning Management System (LMS)	Yaskawa Academy on-line curriculum teaching tool for programming and operation provides best-in-class robotics education for industry, integrators, colleges, engineering schools, career/vocational centers and the local workforce to enable students to become proficient in robotics.
Education Software Bundle	Tailored specifically for the teaching/learning environment. Includes robot operating system, motion engine, INFORM programming language and seven software tools (collision detection, Ethernet FTP. multi-tasking, macro function, job interrupt, relative job, bilingual display for English plus choice of French or Spanish).
I/O Software Bundle	For Ladder and HMI programming. The FS100 Ladder Editor is a pendant-based graphical ladder rung software that allows the user to create I/O routines that run in parallel to the robot INFORM programming. The interface panel function allows the user to create up to ten HMI panels on the pendant for control; each panel features up to 32 buttons, switches, counters or status indicators.
Instructor Kit	Software and hardware teaching aids. Includes offline programming and online operator's curriculum, I/O control box, teach pointer, TCP tool, block nest and set of ten blocks.

STEM Platform – Gen II

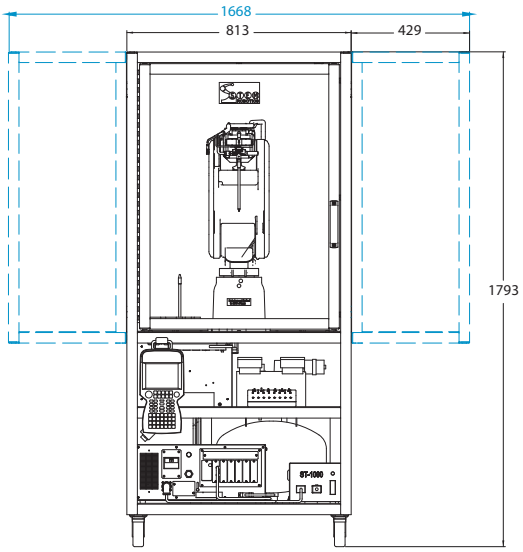

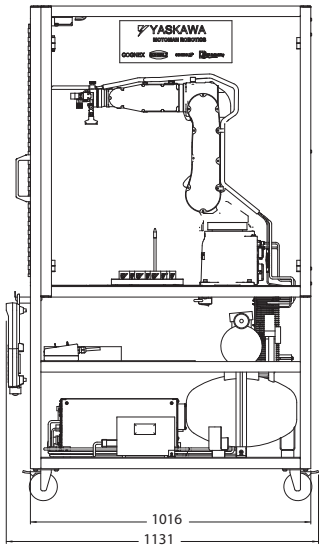

OPTIONAL EXTENSIONS SHOWN WITH BLUE DASHED LINES

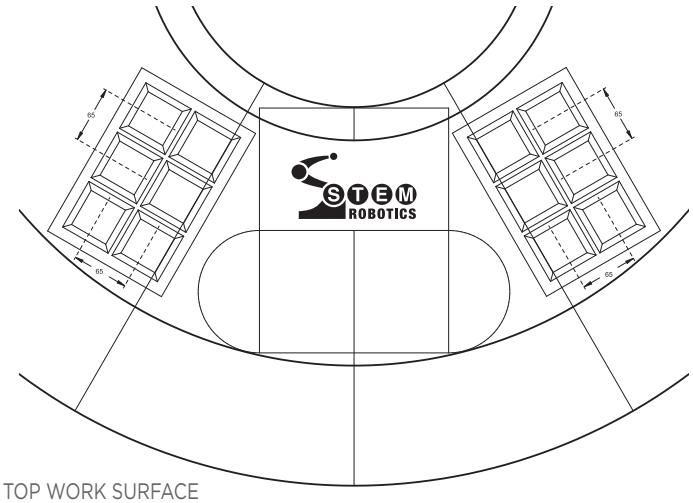

TABLE TOP WORK SURFACE

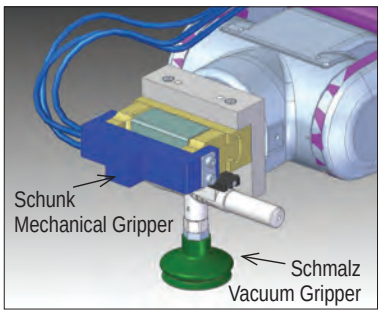

GRIPPER DETAIL

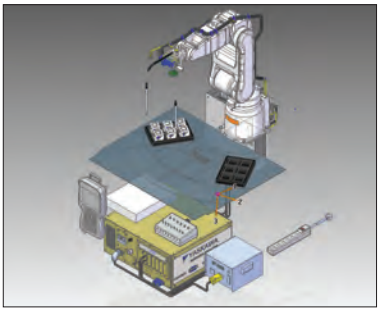

ROBOT PACKAGE

CELL ASSEMBLY WITH OPTIONAL COGNEX VISION SYSTEM

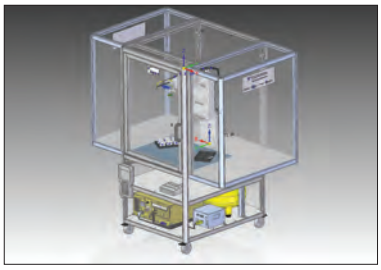

CELL ASSEMBLY WITH EXTENDED ENCLOSURE

OPTIONS

Extensions allow best use of MH5F and MHJ work envelopes. Extensions can be easily removed to transport through 36″ doorway.

Vision kit – Cognex In-Sight® Micro camera and Yaskawa Motoman's Pendant Vision application software. View images and receive information about camera status. Integrates communication directly into the robot programming language.

Conveyor kit – Free-standing conveyor, end-of-travel sensor and control interface.

Air compressor kit – Rated to provide compressed air for standard gripper package. Included if purchased as a cell assembly.

YASKAWA

motoman.com

Yaskawa America, Inc. | Motoman Robotics Division
100 Automation Way | Miamisburg, OH 45342
Tel: 937.847.6200 | Fax: 937.847.6277

YASKAWA

STEM ROBOTICS

STEM Platform

Welding

SCIENCE | TECHNOLOGY | ENGINEERING | MATHEMATICS

KEY BENEFITS

Teach robotics with the same equipment used in factories

Complete, modular packages with options for building custom platforms to fit curriculum and room layout

ELECTRICAL REQUIREMENTS

Robot: 220/240 or 110/120 single-phase

Power Source: 190-630 VAC single- or 3-phase; 240 VAC, 3-phase recommended for full welding current. Power source will not weld with 110 VAC

YMEC

Components provided by Yaskawa Motoman Education Consortium

COGNEX HOBART FILLER METALS Miller Tregaskiss

- Pre-engineered solution designed for education and training programs in advanced manufacturing and robotics.
- Ideal for classrooms, labs and training centers.
- Platform can be used by schools participating in the MERIT certification program.
- Lightweight and fully integrated with a suite of industrial grade academic tools that meet the requirements of secondary educational programs.

COMPONENT	DESCRIPTION
Industrial-designed extruded aluminum cart	• Standard 34" width provides easy access through standard 36" doorway • 6 mm (1/4") thick composite work top with elevated steel work plate • Clear poly-carbonate side panels • Door safety interlock • Controller and power source base mounted • Industrial grade casters with integral leveling hardware
MH5S robot	Play speed is limited to 25% for safety.
DXM100 robot controller	Configured for 110 VAC single-phase power with 110/220 VAC step-up transformer. Digital Weld interface with Graphic Arc Files for setting weld parameters and power source program information. Touch Sensing (80 VDC) with macro jobs for seamfinding deviated workpieces.
Welding package	Miller/ITW welding package (see page 2 for details).
MotoSim® EG-VRC for Education	Comprehensive software package that provides accurate 3D simulation of robot cells and simulates a fully functional production environment.
Learning Management System (LMS)	Yaskawa Academy on-line curriculum teaching tool for programming and operation provides best-in-class robotics education for industry, integrators, colleges, engineering schools, career/vocational centers and the local workforce to enable students to become proficient in robotics.
Education software bundle	Tailored specifically for the teaching/learning environment. Includes robot operating system, motion engine, INFORM programming language and seven software tools (collision detection, Ethernet FTP. multi-tasking, macro function, job interrupt, relative job, bilingual display for English plus choice of French or Spanish).
I/O software bundle	For Ladder and HMI programming. The DXM100 Ladder Editor is a pendant-based graphical ladder rung software that allows the user to create I/O routines that run in parallel to the robot INFORM programming. The interface panel function allows the user to create up to ten HMI panels on the pendant for control; each panel features up to 32 buttons, switches, counters or status indicators.

STEM Platform – Welding

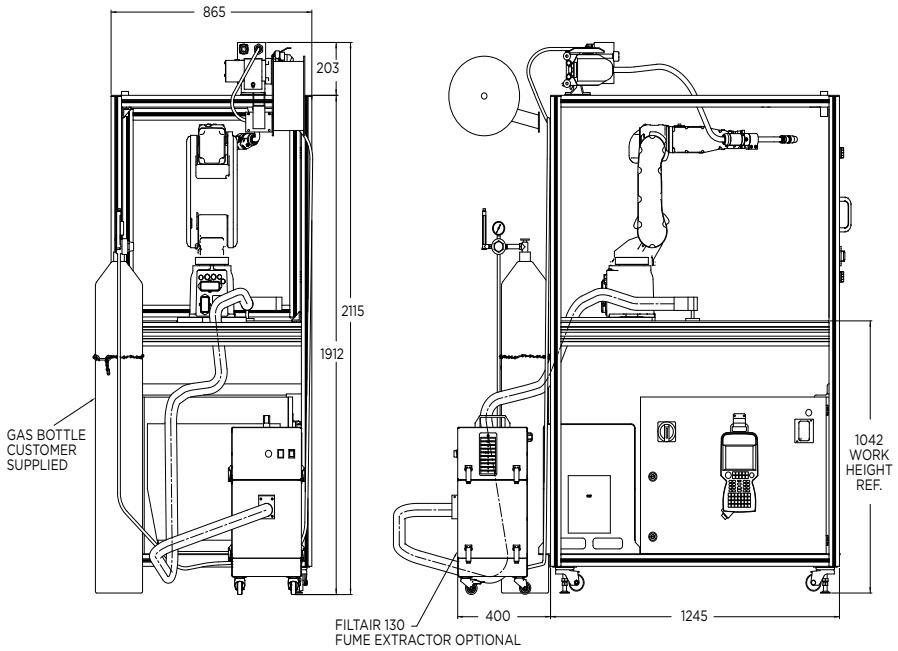

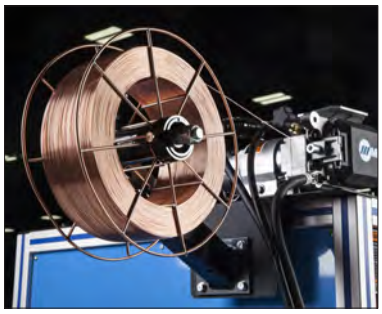

WELD WIRE SPOOL

CONTROLLER AND PENDANT

WELDING PACKAGE

- Miller Auto-Axcess® 300DI power source
- Miller AA40-GB four-roll drive motor with 0.035″ feedrolls
- Tregaskiss air-cooled torch and mounting bracket
- Wire spool support and 30 lb spool of Hobart E-70S-6 wire, 0.035″ dia.
- Gas hose and regulator/flow meter with bottle restraints (gas bottle not included)
- Weld leads, 2/0, for torch and work (elevated fixture plate)

POWER SUPPLY

OPTIONS

Portable Filtration System – Miller FILTAIR® 130 portable air filter with hose and nozzle with magnetic base. Operates on 110 VAC. Hose can be cut to length and run through robot cable opening with nozzle positioned adjacent to work.

Vision Kit – Cognex In-Sight® Micro camera and Yaskawa Motoman's Pendant Vision application software. View images and receive information about camera status. Integrates communication directly into the robot programming language.

MotoSim® Touch - Provides the ability for student to toggle between a virtual pendant or a hardware pendant

Training Credit(s) - Use for various DXM100 technical education modules. Classes are held at Yaskawa Academy, are IACET accredited and qualify for CEUs.

YASKAWA

motoman.com

Yaskawa America, Inc. | Motoman Robotics Division
100 Automation Way | Miamisburg, OH 45342
Tel: 937.847.6200 | Fax: 937.847.6277

Academic Representative:

Technology Education Concepts
1-800-338-2238 | www.TECedu.com | info@TECedu.com

YASKAWA

POWERFUL SIMULATION SOFTWARE
FOR STUDENTS

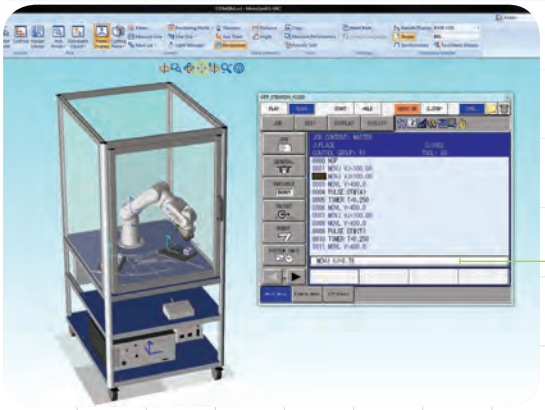

MotoSim EG-VRC*

for Education

OFFLINE PROGRAMMING | 3D SIMULATION | VIRTUAL ROBOT CONTROL

KEY BENEFITS

Learn programming and modeling of industrial robots in a safe, virtual environment

Learn robot capabilities that integrate with industry-leading technologies

Share programming code or upload to a Motoman® robot

Aligned to Yaskawa Academy web-based classroom curriculum (FS100 Operator's Training)

SYSTEM REQUIREMENTS

Recommended	Minimum
Windows® 7 (64 bit)	Windows® 7 (32 bit)
Intel Core i5 CPU	Intel Core 2 Duo CPU
4-8 GB RAM	2 GB RAM
3D Pro graphics card	3D graphics card
4 GB of free hard drive space	

CONTROLLERS

☑ DX100 ☑ DX200

☑ FS100 ☑ NX100

- Comprehensive educational software package for industrial robotic offline programming and virtual 3D simulation of robot cells.
- Performs collision detection, reach analysis and cycle time calculations.
- Supports multiple process applications including arc and spot welding, cutting, handling, painting and sealing.
- This virtual robot controller displays the actual programming pendant interface; virtual programming steps are identical to those used in the real world.
- Supports standard INFORM III programming language and completely simulates the controller software in the PC environment, including system configuration functions, condition file editing and FSU configuration.
- Easy-to-create 3D PDF and AVI files to view and share cell layouts or program operation. Viewing angle and start/stop playback of the robot program can be modified within the 3D PDF file.
- Offline programming and testing reduces programming time and increases production uptime:
  - Program new parts prior to production
  - Modify existing robot programs to increase efficiency and reduce cycle time
  - Detailed path calculation function plots robot's trajectory to simplify program verification
  - Programs created in MotoSim EG-VRC for Education can be downloaded to the robot controller
- Offline cell design can minimize fixturing errors and reduce robot installation time:
  - Add markups and comments
  - Accurately measure distances
  - Create permanent measurement lines
- Utilize Yaskawa Motoman's model library or your own. Frequently used models can be dragged/dropped into a cell.

* MotoSim Enhanced Graphics - Virtual Robot Controller

MotoSim EG-VRC for Education

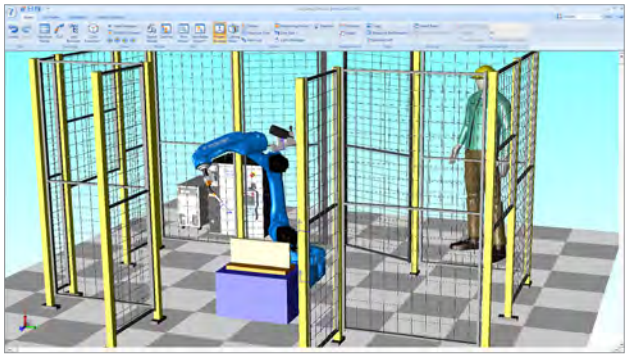

CELL LAYOUT AND DESIGN

DOWNLOAD 3D PDF:
http://www.motoman.com/motosim-3d/

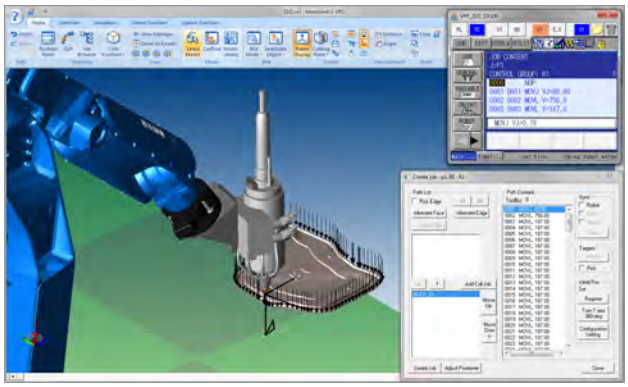

PATH GENERATION FROM 3D CAD MODEL (CAM)

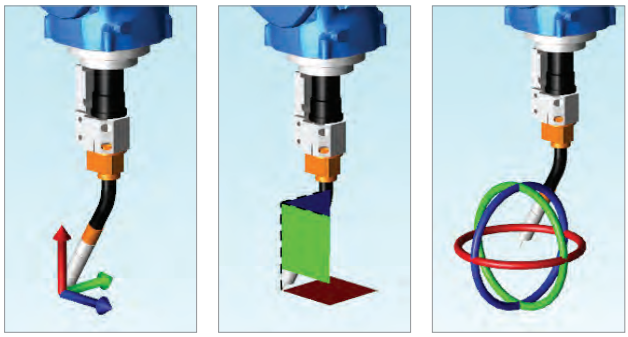

TCP DRAG FUNCTION

CAPABILITIES

- Supports multi-robot and multi-controller simulation
- Robot(s) and external axes control, including independent/coordinated motion and twin synchronous motion functions
- Supports the following CAD file formats:
  - MotoSimEG data (.mdl)
  - HoopsMetafile (.hmf)
  - HoopsStreamfile (.hsf)
  - ACIS (.sat)
  - IGES (.igs, .iges)
  - STEP (.stp, .step)
  - Parasolid (.x_t, .x_b)
  - DXF (.dxf)
  - Renderware (.rwx)
  - Standard Triangulated Language (.stl)
  - VRML (.wrl)
  - 3D Model (.3ds)
  - PLY (.ply)
- Supports standard and optional controller functions such as Macro Command and Relative Job
- Component-level collision detection
- User-definable views
- Automatic robot path generation based on 3D CAD model information. Customizable to include application-specific instructions. Motion type, velocity, number of positions generated and work angle are adjustable. Generate numerous program positions in seconds!
- Modify robot position and manipulate each robot axis by dragging with the mouse. User can also position the robot in Cartesian mode.
- Accurately align models to one another:
  - Process tool or end effector to robot
  - Fixture to positioner
  - Part to fixture

YASKAWA

motoman.com
Yaskawa America, Inc. | Motoman Robotics Division
100 Automation Way | Miamisburg, OH 45342
Tel: 937.847.6200 | Fax: 937.847.6277

YASKAWA

REAL WORLD INDUSTRIAL ROBOTICS
SIMULATION FOR STUDENTS

MotoSim® TOUCH

COMPLETE VIRTUAL INDUSTRIAL ROBOTIC SOLUTION FOR STUDENTS

KEY BENEFITS

Provides "real world" virtual robotics experience at a fraction of the cost of an industrial robot

Provides hands-on, STEM-aligned environment for robotic modeling and programming

Teaches industry-recognized career ready robotics skills

SYSTEM REQUIREMENTS

Recommended	Minimum
Windows® 7 (64 bit) OR Windows® 10 (64 bit)	Windows® 7 (32 bit)
Intel Core i5 CPU	Intel Core 2 Duo CPU
4-8 GB RAM	2 GB RAM
3D Pro graphics card	3D graphics card
4 GB of free hard drive space	

CONTROLLERS

☐ DX200 ☐ DX100 ☑ FS100

- PC-based offline programming environment and robotics simulation tool.
- Designed specifically for K-16 schools, training organizations and educational research institutions.
- Simulates a fully functional production environment.
- Setup in the classroom or robotics lab is quick and easy, with only four cables to plug in.
- Provides the ability for students to toggle between a virtual pendant and a hardware pendant.
- In either mode, students utilize MotoSim EG-VRC* for Education, a comprehensive offline programming and simulation software package.
- Virtual pendant and hardware pendant both utilize easy-to-use INFORM III programming language.
- Robot programs can be moved from the simulation environment to the classroom robot.
- Learn how to program and model industrial robots in a safe, virtual PC environment:
  - Enter and modify data to create a robot job
  - Perform collision detection, reach analysis and cycle time calculations
  - Perform testing and diagnostics
  - Download robot job to robot controller
- Learn how to program robots using a hardware pendant. Practicing with a pendant develops "muscle memory", allowing programming tasks to become second nature.
- Become proficient with a wide variety of robot functions, including:
  - Robot path
  - Speed
  - TCP (tool center point)
  - User frames
  - I/O monitors
  - Macro command
  - Relative job
  - Enhanced multiple robot control
  - Independent/coordinated motion
  - External axis control and coordination
  - User definable view

NOTE: MotoSim Touch is available only to the educational market at this time.
* MotoSim Enhanced Graphics - Virtual Robot Controller

MotoSim Touch

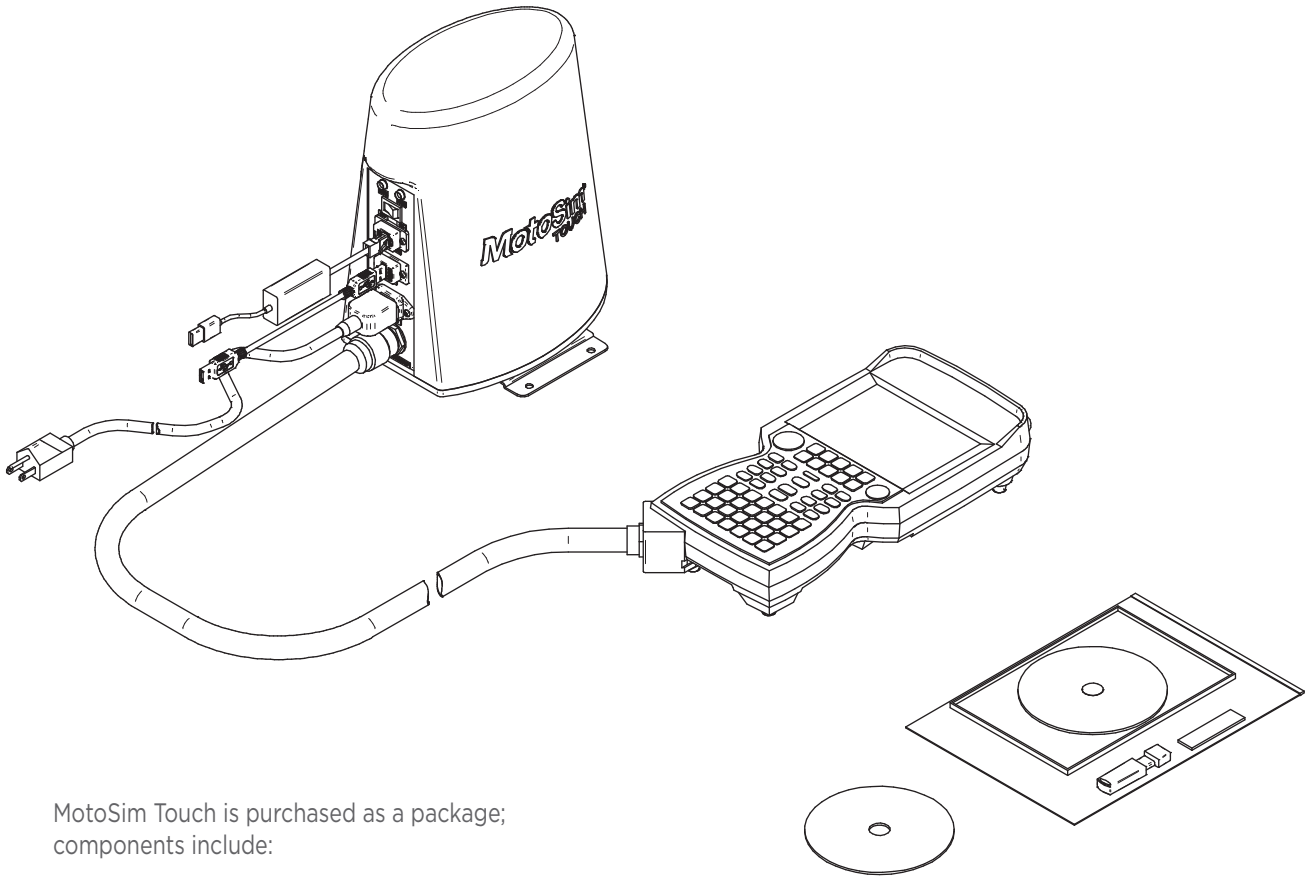

MotoSim Touch is purchased as a package; components include:

- MotoSim Touch (10 ¼″ tall, 6 ¼″ wide, 8 ¾″ long)
- Programming pendant with 6-ft cable
- MotoSim EG-VRC for Education software
- USB to EtherNet adapter and power, network and USB interface cables

YASKAWA

motoman.com

Yaskawa America, Inc. | Motoman Robotics Division
100 Automation Way | Miamisburg, OH 45342
Tel: 937.847.6200 | Fax: 937.847.6277

YASKAWA

STANDARD, PRE-ENGINEERED
ARC WELDING SOLUTION

ArcWorld® C-30

with DX200 Controller

COMPACT ARC WELDING WORKCELL

KEY BENEFITS

Compact workcell suited for job shops and support processes

Mounted on a common base for quick installation and relocation

High flexibility without increased footprint or integration complexity

SPECIFICATIONS

150 kg table payload capacity

1,800 x 690 mm max part size

1,651 x 2,159 mm table area

- Designed specifically for high-mix production of small- to medium-sized parts
- Ideal for low- to medium-volume fabrication requirements
- Workcell is shipped pre-assembled on a common base
- Small footprint for efficient use of space
- Pneumatic-operated door guard for operator safeguarding
- Electromechanical dual-channel safety switch to prevent access to robot during weld process
- Complete sheet metal enclosure for arc flash protection
- Full size MA1440 robot allows for greater part coverage
- Functional Safety Unit to monitor robot position and movement
- World's fastest MA1440 arc welding robot can reduce cycle time by 15 percent, greatly enhancing productivity
- MA-series robots are backed by the industry's only two-year torch cable warranty
- Stationary table for low cost
- Table can be customized with ergonomic part fixtures
- Easy access to components for simplified maintenance and fast service
- Cable routing in covered tray under table for improved life and minimized trip hazard
- Ideally suited to job shops with Kinetiq Teaching™ option
- DX200 controller with dual-channel safety circuitry

Academic Representative:

tec

Technology Education Concepts

1-800-338-2238 | www.TECedu.com | info@TECedu.com

ARCWORLD C-30

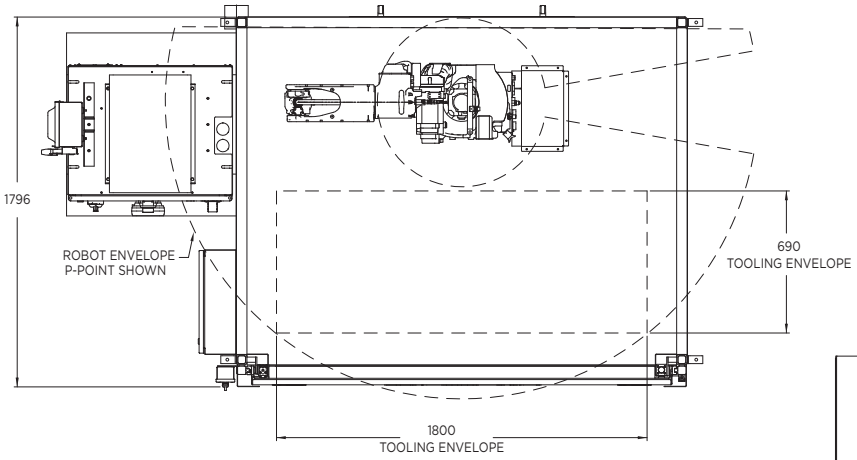

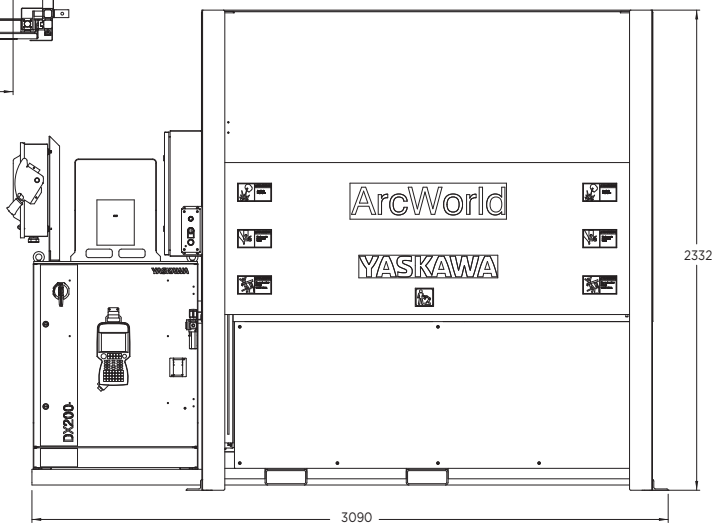

All dimensions are metric (mm) and for reference only.
Request detailed drawings for all design/engineering requirements.

SPECIFICATIONS

MA1440 Robot
6 kg payload
1,440 mm reach

ArcWorld Welding Package
Weld-in-Teach mode function
Graphic arc files
Digital weld interface
Integrated Tregaskiss air-cooled torch package
Arm-mounted 4-roll wire feeder
Welding power source

Operator Control
E-Stop
Illuminated push button cycle start
(latching relay interlocked for safety)

Total Safety Environment
(in compliance with ANSI/RIA R15.06-2012 and Canadian safety standards)
Single point of operator control
Barrier guarding with protective solid panels
Cycle start button interlocked w/safeguards
Pneumatic operated door guard
Functional Safety Unit (FSU) to monitor station axis on operator side

DX200 Controller
Programming pendant with single point of control
Large color touch screen
USB and CF card memory storage
Standard workcell software functions
- Multi-tasking (up to 7 jobs at once)
- Mirror copy
- Ladder logic editing/display
- Collision detection
- Software weaving

Ethernet port
Fieldbus I/O options

KINETIQ TEACHING OPTION

Ideal for new and experienced welding programmers

Direct teaching is more intuitive and reduces programming time

App-style, icon-based menus are easy to learn

Significantly reduces training and programming time for low-volume, high-mix batch production

Yaskawa America, Inc.
Motoman Robotics Division

Academic Representative:

Technology Education Concepts
1-800-338-2238 | www.TECedu.com | info@TECedu.com

NOTES:

1. ALL DIMENSIONS ARE REFERENCE ONLY.
2. BECAUSE MOTOMAN INC IS CONSTANTLY IMPROVING PRODUCTS, MOTOMAN RESERVES THE RIGHT TO CHANGE DESIGN AND/OR SPECIFICATIONS WITHOUT NOTICE.
3. PERMANENT MARK WITH MOTOMAN PART NUMBER 162823-1 AND DRAWING REVISION PER MOTOMAN DESIGN STANDARD SSGW-077 PARA 2.3
4. △4 USE AS APPROPRIATE TO SECURE CAMERA CABLE.
5. SEE SSGW-304 FOR SET-UP INSTRUCTIONS.

Title	P/N	QUAN	ITEM
COVER KIT,CABLES,STEM VISION OPTION	173637-1	1	15
SOFTWARE PKG,MOTOSIGHT2D,FS100	161179-1	1	14
HUB,NETWORK,5 PORT,10/100mbps,EXT POWER	703752-8	1	13
CABLE,RJ45,CAT5,GREY,7 FT.,	704148-3	1	12
CABLE,RJ45,CAT5,BLACK,5 FT,	704148-2	1	11
CABLE,RJ45,CAT5,GREY,1 FT.,	704148-23	1	10
BOARD,PC,MEMORY,1 GIGABYTE,COMPACT FLASH	144650-6	1	9
SCREW,SHC,M6X16,CLASS 12.9	407249-4	2	6
WASHER,FLAT,M6,SS	171086-1	2	7
SCREW, PPH, M3 X 10, JIS B 1188 W/CAPTIVE LOCK WASHER	137972-1	4	4
CABLE,ETHERNET,EURO/RJ45 4M,MALE/MALE,SHIELD,HIGH FLEX	705725-7	1	3
BRACKET, MOUNTING,INSIGHT MICRO VISION,COGNEX	162805-1	1	2
CAMERA,VISION,CPU,IN-SITE MICR, 24VDC,ETHERNET,W/POE AND 12MM LENS	156168-2	1	1

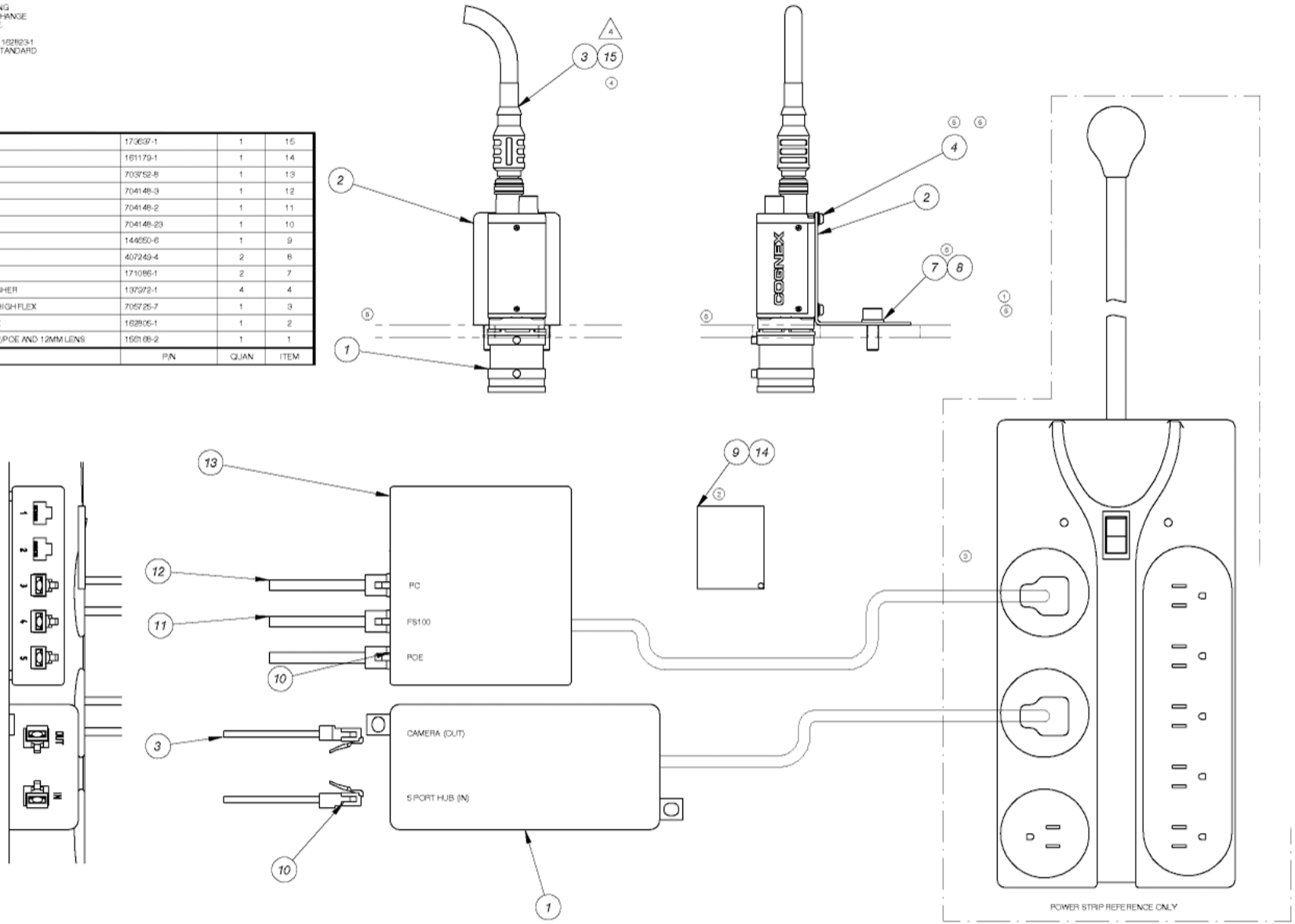

CONFIDENTIAL: THIS DRAWING CONTAINS A PROPRIETARY DESIGN ORIGINATED BY YASKAWA AMERICA INC., MOTOMAN ROBOTICS DIVISION (MOTOMAN ROBOTICS). NEITHER IT NOR THE INFORMATION APPEARING HEREON SHALL BE DISCLOSED, USED, OR DUPLICATED FOR ANY PURPOSE UNLESS SPECIFICALLY AUTHORIZED BY MOTOMAN ROBOTICS. THIS DRAWING IS THE PROPERTY OF MOTOMAN ROBOTICS AND SHALL BE RETURNED TO IT UPON REQUEST. ALL PATENT RIGHTS RELATING HERETO ARE SPECIFICALLY RESERVED.

DECIMAL: 0. ± 1.0; 0.0 ± 0.4; 0.00 ± 0.1; 0.000 ± 0.012; ANGLES ± 30'

GD & T: 0.5; 0.5; 0.5°; 3.2

PROJECTION

METRIC — DO NOT SCALE DRAWING

FILENAME: 162823-1.dft

DWG VERSION

CHANGE RECORD						
No	E.C.N.	DATE	No	E.C.N.	DATE
1			7		
2			8		
3			9		
4			10		
5			11		
6			12		

DESIGNED: GHS
DRAWN: MAP 6/7/12
CHECKED: DLC 8/14/12
MATERIAL
FINISH
APPROVAL: GHS 8/14/12
APPROVAL: GHS 8/14/12
RELEASE: KAT 8/16/12
MASS: 3.1 kg
NOUN CODE: 351

YASKAWA
MOTOMAN ROBOTICS
MIAMISBURG, OHIO 45342 USA (937-847-6200)

TITLE: VISION,KIT,EDUCATIONAL CELL

DWG SIZE: A1 | SCALE: 1:1 | DWG REV: 4 | DWG NO: 162823-1 | SHEET 2 OF 2

YASKAWA
ACADEMY

ACCREDITED IACET PROVIDER

MERIT Program

Motoman Endorsed Robotics Instructor Training

The MERIT Program was developed specifically for educational institutions with a vision of becoming a Yaskawa Motoman satellite training facility or to support workforce development certification with industry. It is designed to bring the same quality of training, as delivered by the Yaskawa Academy staff, closer to our installed base.

Two program levels are available. One for undergraduate certification, and one for workforce and industrial users. Length of training varies depending on the participant's robot programming experience.

It is highly recommended for educational institutions to identify a primary and a secondary instructor.

YASKAWA ACADEMY

With 13,400 sq ft and 56 robots dedicated to training, Yaskawa Academy offers the most comprehensive training package in the industry. Classroom instruction, combined with hands-on training, is available for over 75 training courses including: Operator's training, Basic Programming, Advanced Programming, Ladder Logic (PLC) and Maintenance. Our 2:1 student-to-robot ratio maximizes "hands-on opportunities. Application-specific training classes are also available depending on your focus and vision.

All training courses and programs undergo a rigorous evaluation process which adheres to the American National Standards Institute / International Association of Continuing Education and Training (ANSI/IACET 1-2013 Standard).

Science | Technology | Engineering | Mathematics

TWO MERIT PROGRAM LEVELS

MERIT Program for Undergraduate Certification

Designed for instructors of high school students, career tech and college undergraduates. Consisting of three phases, participants will gain the ability to deliver structured curriculum in a knowledgeable, confident and consistent manner. This program level enables schools to develop a student-based robotics certification course(s) with a focus on core robotics skills, or to expand an existing mechatronics robotics program. Topics can be customized with any set of objectives in mind.

MERIT Program for Workforce and Industrial Users

Designed for instructors of workforce and industrial users. Once an instructor becomes certified in a specific training class, he or she can deliver the same curriculum and instructional model as Yaskawa Academy to local manufacturers. This program level consists of five phases.

HIGHLIGHTS

- Industrial robotics curriculum is aligned with academic degree programs and state-based career pathway skills
- Recognition as a certified Yaskawa Motoman endorsed satellite training facility
- On-line curriculum support (blended model) for instructors
- Expansion of knowledge base and accessibility of robotics skills and local or geographic centered industries
- One-on-one assignment of a Yaskawa Academy robotics instructor to ensure continued success and development of staff
- Annual audit to ensure compliance and success

Academic Representative:

tec

Technology Education Concepts

1-800-338-2238 | www.TECedu.com | info@TECedu.com

PROGRAM PHASE DESCRIPTIONS

PHASE I | PHASE II | PHASE III

These three phases are intended for participants of both MERIT program levels.

PHASE I

Participants attend the respective training class as a **"STUDENT"**. The focus of this phase is to learn and understand the topics as delivered from a Yaskawa Academy certified instructor.

PHASE II

Participants may attend the same class for a second time as an **"OBSERVER"**. This phase is not mandatory, however it is strongly recommended as it enables the OBSERVER to focus more on the delivery of the topics and the timing of all exercises. This provides the opportunity for the OBSERVER to hear the types of questions being asked from actual students and to formulate their own solution prior to the response from the certified instructor. This phase also helps to instill the confidence level required to deliver class topics in front of students that may have already been exposed to robot programming.

PHASE III

One-on-one skills assessment to identify strengths and weaknesses of the participant, as an **"INSTRUCTOR"**. The INSTRUCTOR delivers the course material to a Yaskawa Academy robotics instructor who will complete the assessment and provide examples to ensure and reinforce the understanding of the topics being delivered.

PHASES IV | PHASE V

These two phases are intended for participants of the MERIT Program for Workforce and Industrial Users.

PHASE IV

The participant, as an **"INSTUCTOR"**, delivers the class to a live audience at your facility with a Yaskawa Academy certified robotics instructor present as a coach. A daily review will be conducted, as well as an overall report to indicate certification status.

Once scheduled, your class will be posted on Yaskawa Academy's web site. Potential students may enroll through Yaskawa Academy or directly through your facility.

NOTE: It is the responsibility of the educational institution to schedule this class.

PHASE V

A Yaskawa Academy certified instructor will make an annual visit to your facility to ensure that training classes are presented in compliance with the established delivery structure. Curriculum and manual updates will also be provided.

UPON COMPLETION

MERIT Program – For Undergraduate Certification

- Assistance is available from Yaskawa Academy staff, via email or phone, for non-emergency issues during regular business hours
- Educational institutions have the option of purchasing Yaskawa Academy's standard curriculum to eliminate the cost of developing and maintaining curriculum

MERIT Program – for Workforce and Industrial Users

- A MERIT Agreement between Yaskawa Academy and the educational institution will be issued that will outline the responsibilities of both parties
- Yaskawa Academy curriculum can be offered by your MERIT-certified instructor at your facility to local manufacturers
  - Students of these courses receive the same class material, curriculum and instruction as if attending Yaskawa Academy
  - Students that successfully complete a course delivered by a MERIT-certified instructor will receive a certificate which is a valid prerequisite for any future advanced training course within the respective controller group
  - Students are eligible to earn Continuing Education Units (CEUs)
- Assistance is available from Yaskawa Academy staff, via email or phone, for non-emergency issues during regular business hours

Yaskawa America, Inc. | Motoman Robotics Division
100 Automation Way | Miamisburg, OH 45342
Tel: 937.847.6200 | Fax: 937.847.6277

YASKAWA
ACADEMY

ACCREDITED IACET PROVIDER

Modified MERIT Program

Motoman Endorsed Robotics Instructor Training

The Modified MERIT Program was developed specifically for educational institutions with a vision of introducing robotics at an elementary, high school, career tech or college undergraduate level. It provides the ability for schools to develop a student-based robotics certification course(s) with a focus on core robotics skills, or to expand an existing mechatronics robotics program.

This program consists of three phases per course with the option to upgrade to the MERIT Program to complete Phases IV and V. Participants will gain the ability to deliver structured curriculum in a knowledgeable, confident and consistent manner.

Length of training varies depending on the participant's robot programming experience. It is highly recommended for educational institutions to identify a primary and a secondary instructor.

YASKAWA ACADEMY

With 13,400 sq ft and 56 robots dedicated to training, Yaskawa Academy offers the most comprehensive training package in the industry. Classroom instruction, combined with hands-on training, is available for over 75 training courses including: Operator's training, Basic Programming, Advanced Programming, Ladder Logic (PLC) and Maintenance. Our 2:1 student-to-robot ratio maximizes "hands-on" opportunities.

All training courses and programs undergo a rigorous evaluation process which adheres to the American National Standards Institute / International Association of Continuing Education and Training (ANSI/IACET 1-2013 Standard).

Science | Technology | Engineering | Mathematics

PHASES

Phase I – Participants attend the respective training class as a **"STUDENT"**. The focus of this phase is to learn and understand the topics as delivered from a Yaskawa Academy certified instructor.

Phase II - Participants may attend the same class for a second time as an **"OBSERVER"**. This phase is not mandatory, however it is strongly recommended as it enables the OBSERVER to focus more on the delivery of the topics and the timing of all exercises. This provides the opportunity for the OBSERVER to hear the types of questions being asked from actual students and to formulate their own solution prior to the response from the certified instructor. This phase also helps to instill the confidence level required by an instructor to deliver class topics in front of students that may have already been exposed to robot programming.

Phase III – One-on-one skills assessment to identify strengths and weaknesses of the participant as an **"INSTRUCTOR"**. The INSTRUCTOR delivers the course material to a Yaskawa Academy robotics instructor who will complete the assessment and provide examples to ensure and reinforce the understanding of the topics being delivered.

HIGHLIGHTS

On-line curriculum support (blended model) for instructors

The Yaskawa Academy logo is authorized for use on Certificates of Completion for courses presented by your instructors that have completed the Modified MERIT Program.

Assistance is available from Yaskawa Academy staff, via email or phone, for non-emergency issues during regular business hours

Educational institutions have the option of purchasing Yaskawa Academy's standard curriculum to eliminate the cost of developing and maintaining curriculum

Send inquiries to training@motoman.com or call 937.847.3307

yaskawa-motoman.com

Yaskawa America, Inc. | Motoman Robotics Division
100 Automation Way | Miamisburg, OH 45342
Tel: 937.847.6200 | Fax: 937.847.6277

YASKAWA
ACADEMY

ACCREDITED IACET PROVIDER

Train-the-Trainer Program

The Train-the-Trainer Program is designed specifically for educational institutions to provide students with a Yaskawa industrial robotic credential. It provides training, resources and tools for instructors to teach a robotics credentialing course. Train-the-Trainer consists of three phases per course. Participants will learn to deliver Yaskawa's robotics curriculum in a knowledgeable, confident and consistent manner.

Length of training varies depending on the participant's robot programming experience. It is highly recommended for educational institutions to identify a primary and a secondary instructor.

YASKAWA ACADEMY

With 13,400 sq ft and 56 robots dedicated to training, Yaskawa Academy offers the most comprehensive training package in the industry. Classroom instruction, combined with hands-on training, is available for over 75 training courses including: Operator's training, Basic Programming, Advanced Programming, Ladder Logic (PLC) and Maintenance. Our 2:1 student-to-robot ratio maximizes "hands-on" opportunities.

All training courses and programs undergo a rigorous evaluation process which adheres to the American National Standards Institute / International Association of Continuing Education and Training (ANSI/IACET 1-2013 Standard).

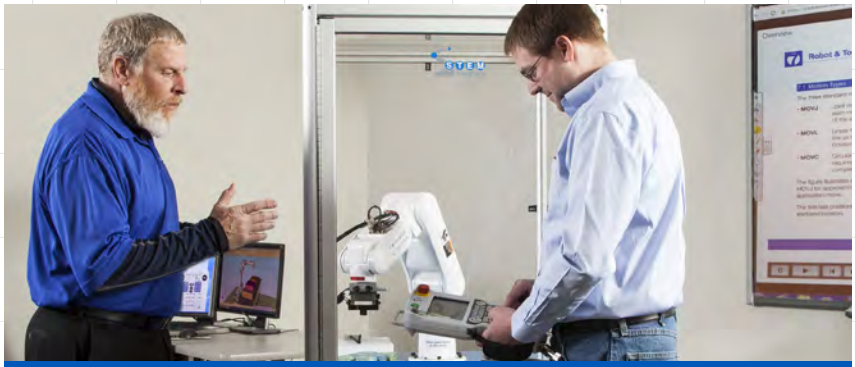

Science | Technology | Engineering | Mathematics

PHASES

Phase I – 30 hours

Pre-work and assessment using Yaskawa Academy's web-based curriculum.

Phase II – one week

Participants attend the respective training class as a STUDENT. The focus of this phase is to learn and understand the topics as delivered from a Yaskawa Academy certified instructor.

Phase III – three days

Teacher workshop environment focusing on teaching skills for the school instructor. This workshop, held at Yaskawa Academy, will enable the INSTRUCTOR to become more familiar with the topics prior to developing and/or delivering curriculum at their own facility. INSTRUCTORS are encouraged to identify their strengths, and to discuss training concepts and ideas with other participants.

Once Phase III has been completed, schools and educational organizations can purchase Student Classroom Resource kits ($150.00 per student) that include: outline, objective, training manual, handouts, quizzes, final exam and the use of the Yaskawa Academy logo to incorporate into your certificate of completion.

HIGHLIGHTS

On-line curriculum support (blended model) for instructors.

The Yaskawa Academy logo is authorized for use on certificates of completion for courses presented by your instructors that have completed the Train-the-Trainer Program.

Assistance is available from Yaskawa Academy staff, via email or phone, for non-emergency issues during regular business hours.

Educational institutions have the option of purchasing Yaskawa Academy's standard curriculum to eliminate the cost of developing and maintaining curriculum.

Send inquiries to training@motoman.com or call 937.847.3307

yaskawa-motoman.com

Yaskawa America, Inc. | Motoman Robotics Division
100 Automation Way | Miamisburg, OH 45342
Tel: 937.847.6200 | Fax: 937.847.6277

YASKAWA
ACADEMY

ACCREDITED IACET PROVIDER

Online Learning Management System (LMS)

Enabling Students to Become Proficient in Robotics

Designed specifically for education and industrial customers, this web-based LMS provides best-in-class robotics education for:

- Colleges
- Engineering schools
- Career/vocations centers
- Workforce development
- Industry
- Integrators

The comprehensive STEM-aligned curriculum was developed in conjunction with Yaskawa Motoman's educational and industrial partners, and is mapped to industrial skills and education standards. It is ideal for:

- School classrooms and lab use
- Advanced manufacturing training
- Industrial certification programs

Students learn to recognize general program instructions and to operate Yaskawa Motoman's FS100 robot controller. This knowledge also applies to other Yaskawa controllers. Classroom exercises, designed by Yaskawa Academy curriculum developers, provide hands-on exposure to robot programming and operation.

This LMS contains instructional modules with content equivalent to a 30-hour classroom experience. Students and instructors have the ability to track progress and course effectiveness.

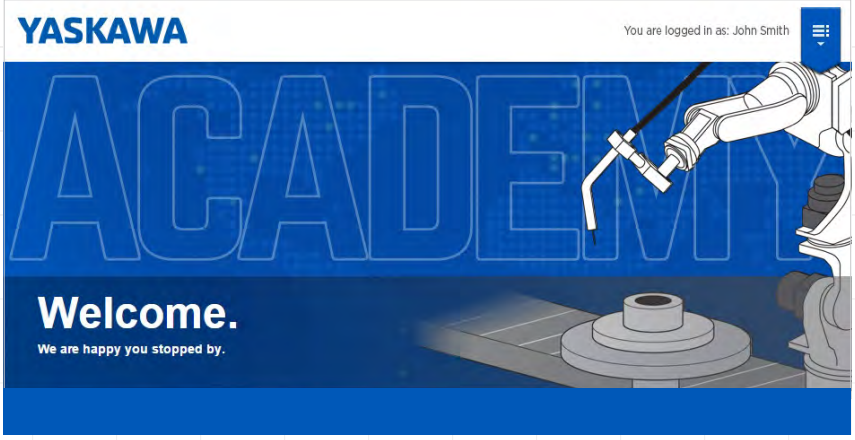

LMS FEATURES

- 24/7 accessibility from any web browser (Google Chrome preferred)
- Learning portal and course access from computers, tablets and smartphones (no p players are required)
- Secure log-in for teache instructors and student
- Online class manageme
- 15 learner outcomes, inc and certification
- Chapter overviews and assessments
- Audio narration

COURSE TOPICS

Basic Operator's Training

Introduction to operation and program instruction recognition for the FS100 controller

Safety Principles

Industrial robot safety
Terminology
Best safety practices
Safety envelopes

Academic Representative:

Technology Education Concepts
1-800-338-2238 | www.TECedu.com | info@TECedu.com

For additional assistance, please call (937) 847-3496 or send your inquires to training@motoman.com.

Yaskawa Academy's LMS is developed on Absorb's responsive HTML-5 platform: yaskawaacademy.myabsorb

yaskawa-motoman.com

Yaskawa America, Inc. | Motoman Robotics Division
100 Automation Way | Miamisburg, OH 45342
Tel: 937.847.6200 | Fax: 937.847.6277

YASKAWA

STEM Education / Workforce Development

EFFECTIVENESS STUDY CONDUCTED BY THE UNIVERSITY OF DAYTON WOODROW WILSON TEACHING FELLOWSHIP

DX100 BASIC PROGRAMMING TRAINING EVALUATION

BACKGROUND

DX100 Basic Programming Training is a four-day class offered by Yaskawa Motoman in Miamisburg, Ohio. The training consists of classroom lectures, demonstrations, discussions and hands-on practice exercises. Topics covered during class are related to real-world examples and applications. The training is interactive with two students sharing one pendant or a single-point control device for all robot system operations and programming with the DX100 controller. Students perform hands-on practice exercises during the four days of training. Each student is given a copy of the DX100 Basic Programming Training Manual. The training manual provides detailed instructions and programming techniques for the Motoman® controller.

EVALUATION APPROACH

Two Woodrow Wilson Teaching Fellows from the University of Dayton conducted the evaluation. The evaluators participated in the four-day training class to determine:

A. **Training Alignment to the STEM Education Quality Framework**

B. **Common Core Content Standards in Math Addressed in Training**

A. Classroom Instruction / Training Alignment to the STEM Education Quality Framework

The STEM Education Quality Framework is a "set of principles that provide a conceptualization of the teaching and learning context in which quality STEM education might be situated". The STEM Education Quality Framework assessment can be found in the following link: http://stemframework.washingtonstem.org/

The framework has 10 STEM learning quality components. Each component can be rated as Not Evident, Emerging, Accomplished or Advanced. The 10 STEM learning quality components are listed below with comments of how the DX100 Basic Programming Training fits into the framework based on observations from the Woodrow Wilson Teaching Fellows. The Woodrow Wilson Fellows, in response to their experiences during the course, believe the training program warrants the rating of "Advanced" in six areas, "Accomplished" in two areas, and "Emerging" in two areas.

NOT EVIDENT	EMERGING	ACCOMPLISHED	ADVANCED
• N/A	• Degree of STEM Integration • Application of the Engineering Design Process	• Connections to Non-STEM Disciplines • Quality of Cognitive Task	• Potential for Engaging Students of Diverse Academic Background • Integrity of the Academic Content • Connections to STEM Careers • Individual Accountability in a Collaborative Culture • Nature of Assessments • Quality of Technology Integration

B. Math Common Core Content Standards Addressed in Training

The Common Core Content Standards in Math are a set of common learning goals that forty-five states have adopted in order to homogenize learning targets in grades K-12 math classes. The mathematical standards indicate what all students are expected to learn in order to become college and career ready. The standards can be accessed at the following website: http://www.corestandards.org/Math

The following are the Common Core Standards in Math that the Woodrow Wilson Fellows believe are incorporated in the DX100 training program:

a. CCSS.Math.Content.HSG-GMD.B.4 Identify the shapes of two-dimensional cross-sections of three-dimensional objects, and identify three-dimensional objects generated by rotations of two-dimensional objects.

b. CCSS.Math.Content.HSG-MG.A.2 Apply concepts of density based on area and volume in modeling situations (e.g., persons per square mile, BTUs per cubic foot, rotations per second).

c. CCSS.Math.Content.HSG-MG.A.3 Apply geometric methods to solve design problems (e.g., designing an object or structure to satisfy physical constraints or minimize cost; working with typographic grid systems based on ratios).

SUMMARY

The DX100 training program uses mathematical reasoning, processes and skills identified in the Common Core State Standards in Mathematics. Three math standards are incorporated in the training because most of the mathematical computations required for movement are completed by the DX100 robot programs. In addition, there are more mathematical skills and standards which are addressed in advanced programming courses.

The training was effective in teaching the basic programming skills for Yaskawa Motoman DX100 robots. No prior knowledge of robot programming or prerequisite was required for the training. For high school and colleges, Yaskawa Motoman has STEM Robotic education cells that can be customized for individual schools. This allows the schools to teach students robotic programming skills that are highly desirable in industries.

Yaskawa America, Inc. | Motoman Robotics Division
100 Automation Way | Miamisburg, OH 45342
Tel: 937.847.6200 | Fax: 937.847.6277

ROBOTICS EDUCATION IN AMERICA

SNAPSHOT 2016

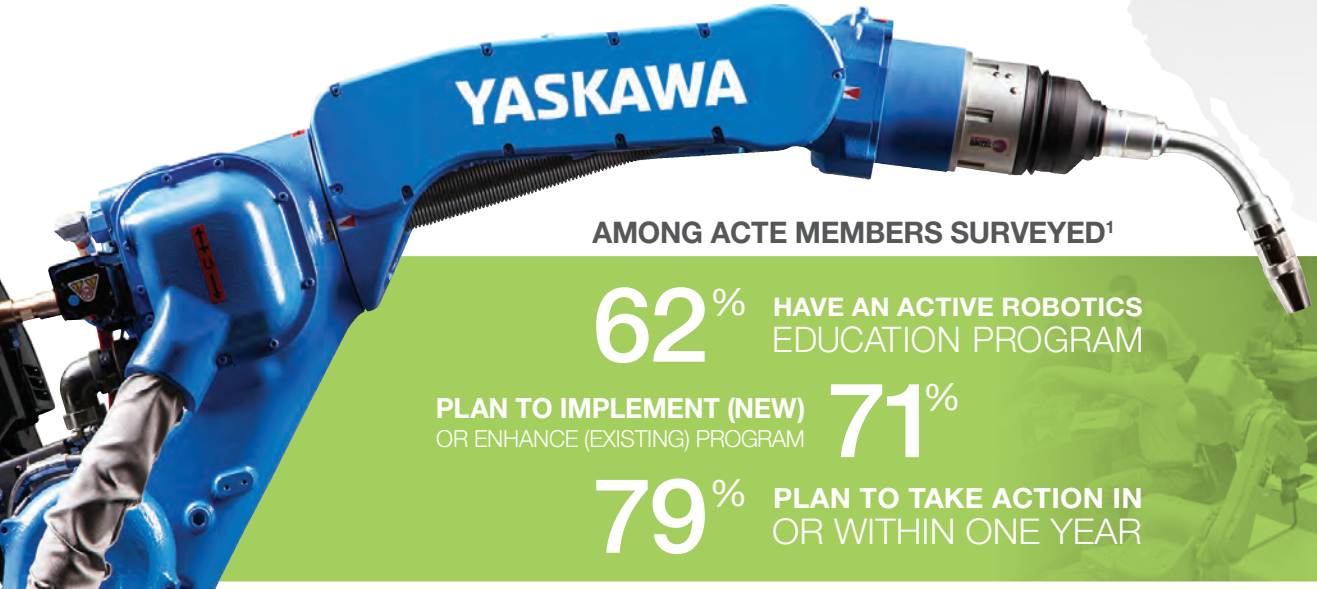

AMONG ACTE MEMBERS SURVEYED[1]

62% HAVE AN ACTIVE ROBOTICS EDUCATION PROGRAM

71% PLAN TO IMPLEMENT (NEW) OR ENHANCE (EXISTING) PROGRAM

79% PLAN TO TAKE ACTION IN OR WITHIN ONE YEAR

FUNDING SOURCES FOR STEM/WORKFORCE PROGRAMS

- 71% General budget
- 41% Federal grants
- 41% Private sector funding
- 38% Academic grants

STEM/WORKFORCE DEVELOPMENT GOALS

1. Access to real-world industrial technology
2. Increased program visibility/reach
3. Improved enrollment
4. Job placement with area business

BUSINESS PARTNERSHIPS

- **24%** Actively partnering with companies using robotics
- **27%** Pursuing partnerships
- **49%** No partnership/pursuit

TOP AREAS OF NEED

Curriculum 63%
Classroom and web-based tools

Training 65%
Certification and credentialing

Equipment 80%
Lab and classroom equipment, parts and consumables, equipment service

Download the full report at **motoman.com/stemresults**

[1] Survey participants included nearly 300 ACTE (Association for Career and Technical Education) members. Survey conducted spring 2016.

Academic Representative:

Technology Education Concepts

1-800-338-2238 | www.TECedu.com | info@TECedu.com